Tape Dimensions

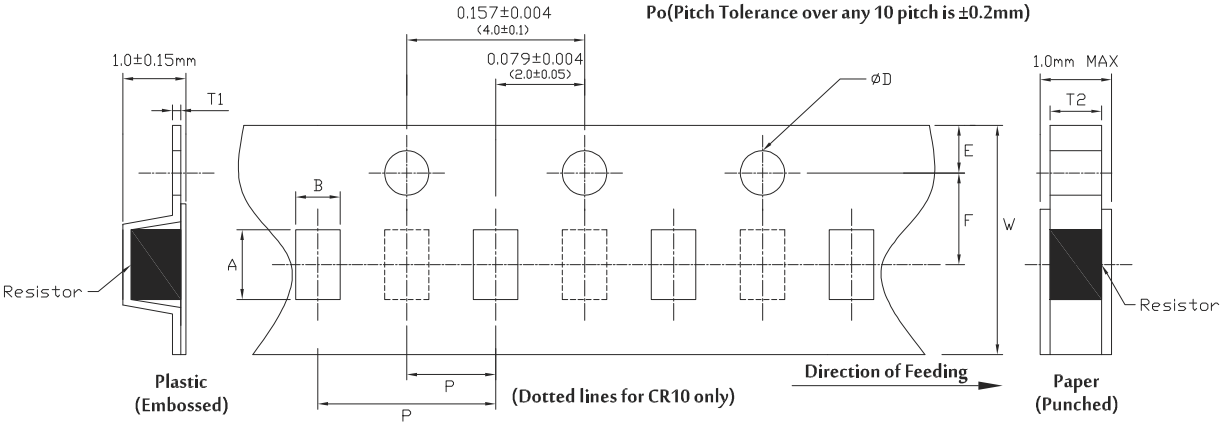

Chip Resistors

Dimensions	A	B	W	E	F
	Inches (Millimeters)				
Chip Resistor 05 0201 (0603)	0.015 ± 0.002 (0.38 ± 0.05)	0.027 ± 0.002 (0.68 ± 0.05)	0.315 ± 0.008 (8.00 ± 0.20)	0.069 ± 0.004 (1.75 ± 0.10)	0.138 ± 0.002 (3.50 ± 0.05)
Chip Resistor 10 0402 (1005)	0.045 ± 0.004 (1.15 ± 0.10)	0.026 ± 0.004 (0.65 ± 0.10)	0.315 ± 0.008 (8.00 ± 0.20)	0.069 ± 0.004 (1.75 ± 0.10)	0.138 ± 0.002 (3.50 ± 0.05)
Chip Resistor 16 0603 (1608)	0.075 ± 0.004 (1.90 ± 0.10)	0.043 ± 0.004 (1.10 ± 0.10)	0.315 ± 0.008 (8.00 ± 0.20)	0.069 ± 0.004 (1.75 ± 0.10)	0.138 ± 0.002 (3.50 ± 0.05)
Chip Resistor 21 0805 (2012)	0.094 ± 0.004 (2.40 ± 0.10)	0.065 ± 0.004 (1.65 ± 0.10)	0.315 ± 0.008 (8.00 ± 0.20)	0.069 ± 0.004 (1.75 ± 0.10)	0.138 ± 0.002 (3.50 ± 0.05)
Chip Resistor 32 1206 (3216)	0.138 ± 0.004 (3.50 ± 0.10)	0.075 ± 0.004 (1.90 ± 0.10)	0.315 ± 0.008 (8.00 ± 0.20)	0.069 ± 0.004 (1.75 ± 0.10)	0.138 ± 0.002 (3.50 ± 0.05)
Chip Resistor 40 1210 (3225)	0.138 ± 0.004 (3.50 ± 0.10)	0.110 ± 0.004 (2.80 ± 0.10)	0.315 ± 0.008 (8.00 ± 0.20)	0.069 ± 0.004 (1.75 ± 0.10)	0.138 ± 0.002 (3.50 ± 0.05)
Chip Resistor 50 2010 (5025)	0.213 ± 0.008 (5.40 ± 0.20)	0.114 ± 0.008 (2.90 ± 0.20)	0.472 ± 0.004 (12.0 ± 0.10)	0.069 ± 0.004 (1.75 ± 0.10)	0.217 ± 0.002 (5.50 ± 0.05)
Chip Resistor 63 2512 (6432)	0.272 ± 0.008 (6.60 ± 0.20)	0.142 ± 0.008 (3.60 ± 0.20)	0.472 ± 0.004 (12.0 ± 0.10)	0.069 ± 0.004 (1.75 ± 0.10)	0.217 ± 0.002 (5.50 ± 0.05)

Dimensions	T1	T2	P	D
	Inches (Millimeters)			
Chip Resistor 05 0201 (0402)	-	0.012 ± 0.004 (0.31 ± 0.10)	0.079 ± 0.002 (2.00 ± 0.05)	$0.059^{+0.004}_{-0}$ $(1.5^{+0.10}_{-0})$
Chip Resistor 10 0402 (1005)	-	0.018 ± 0.004 (0.45 ± 0.10)	0.079 ± 0.002 (2.00 ± 0.05)	$0.059^{+0.004}_{-0}$ $(1.5^{+0.10}_{-0})$
Chip Resistor 16 0603 (1608)	-	0.024 ± 0.004 (0.60 ± 0.10)	0.157 ± 0.004 (4.00 ± 0.10)	$0.059^{+0.004}_{-0}$ $(1.5^{+0.10}_{-0})$
Chip Resistor 21 0805 (2012)	-	0.030 ± 0.004 (0.75 ± 0.10)	0.157 ± 0.004 (4.00 ± 0.10)	$0.059^{+0.004}_{-0}$ $(1.5^{+0.10}_{-0})$
Chip Resistor 32 1206 (3216)	-	0.030 ± 0.004 (0.75 ± 0.10)	0.157 ± 0.004 (4.00 ± 0.10)	$0.059^{+0.004}_{-0}$ $(1.5^{+0.10}_{-0})$
Chip Resistor 40 1210 (3225)	-	0.030 ± 0.004 (0.75 ± 0.10)	0.157 ± 0.004 (4.00 ± 0.10)	$0.059^{+0.004}_{-0}$ $(1.5^{+0.10}_{-0})$
Chip Resistor 50 2010 (5025)	0.008 ± 0.004 (0.20 ± 0.10)	-	0.157 ± 0.004 (4.00 ± 0.10)	$0.059^{+0.004}_{-0}$ $(1.5^{+0.10}_{-0})$
Chip Resistor 63 2512 (6432)	0.008 ± 0.004 (0.20 ± 0.10)	-	0.315 ± 0.004 (4.00 ± 0.10)	$0.059^{+0.004}_{-0}$ $(1.5^{+0.10}_{-0})$

Array & Networks

Inches (Millimeters)						
Dimensions	A	B	W	E	F	P1
YCN052 0201 X 2	0.028 ± 0.004 (0.7 ± 0.1)	0.035 ± 0.004 (0.9 ± 0.1)	0.315 ± 0.008 (8.0 ± 0.2)	0.069 ± 0.004 (1.75 ± 0.1)	0.138 ± 0.002 (3.5 ± 0.05)	0.079 ± 0.004 (2.0 ± 0.1)
YCN102 0402 X 2	0.047 ± 0.004 (1.2 ± 0.1)	0.047 ± 0.004 (1.2 ± 0.1)	0.315 ± 0.008 (8.0 ± 0.2)	0.069 ± 0.004 (1.75 ± 0.1)	0.138 ± 0.002 (3.5 ± 0.05)	0.079 ± 0.004 (2.0 ± 0.1)
YCN104 0402 X 4	0.047 ± 0.004 (1.2 ± 0.1)	0.087 ± 0.004 (2.2 ± 0.1)	0.315 ± 0.008 (8.0 ± 0.2)	0.069 ± 0.004 (1.75 ± 0.1)	0.138 ± 0.002 (3.5 ± 0.05)	0.079 ± 0.004 (2.0 ± 0.1)
YCN108 0402 X 8	0.075 ± 0.008 (1.9 ± 0.2)	0.169 ± 0.008 (4.3 ± 0.2)	0.472 ± 0.008 (12.0 ± 0.2)	0.069 ± 0.004 (1.75 ± 0.1)	0.138 ± 0.002 (3.5 ± 0.05)	0.157 ± 0.004 (4.0 ± 0.1)
YCN162 0603 X 2	0.075 ± 0.004 (1.9 ± 0.1)	0.075 ± 0.004 (1.9 ± 0.1)	0.315 ± 0.008 (8.0 ± 0.2)	0.069 ± 0.004 (1.75 ± 0.1)	0.138 ± 0.002 (3.5 ± 0.05)	0.157 ± 0.004 (4.0 ± 0.1)
YCN164 0603 X 4	0.075 ± 0.004 (1.9 ± 0.1)	0.136 ± 0.004 (3.45 ± 0.1)	0.315 ± 0.008 (8.0 ± 0.2)	0.069 ± 0.004 (1.75 ± 0.1)	0.138 ± 0.002 (3.5 ± 0.05)	0.157 ± 0.004 (4.0 ± 0.1)
YCN158 0612 (1632)	0.079 ± 0.004 (2.0 ± 0.1)	0.138 ± 0.004 (3.5 ± 0.1)	0.315 ± 0.008 (8.0 ± 0.2)	0.069 ± 0.004 (1.75 ± 0.1)	0.138 ± 0.002 (3.5 ± 0.05)	0.157 ± 0.002 (4.0 ± 0.05)
YCN358 1225 (3264)	0.138 ± 0.008 (3.5 ± 0.2)	0.264 ± 0.008 (6.7 ± 0.2)	0.472 ± 0.008 (12.0 ± 0.2)	0.069 ± 0.004 (1.75 ± 0.1)	0.138 ± 0.002 (3.5 ± 0.05)	0.157 ± 0.004 (4.0 ± 0.1)
LCN164 0603 X 4	0.079 ± 0.004 (2.0 ± 0.1)	0.138 ± 0.004 (3.5 ± 0.1)	0.315 ± 0.008 (8.0 ± 0.2)	0.069 ± 0.004 (1.75 ± 0.1)	0.138 ± 0.002 (3.5 ± 0.05)	0.157 ± 0.002 (4.0 ± 0.05)

Inches (Millimeters)					
Dimensions	P2	P0	D0	T2	T
YCN052 0201 X 2	0.079 ± 0.002 (2.0 ± 0.05)	0.157 ± 0.002 (4.0 ± 0.05)	$0.059^{+0.004}_{-0}$ ($1.5^{+0.10}_{-1}$)	$0.018^{+0.008}_{-0}$ ($0.45^{+0.2}_{-0}$)	0.017 ± 0.004 (0.43 ± 0.1)
YCN102 0402 X 2	0.079 ± 0.002 (2.0 ± 0.05)	0.157 ± 0.002 (4.0 ± 0.05)	$0.059^{+0.004}_{-0}$ ($1.5^{+0.10}_{-1}$)	$0.018^{+0.008}_{-0}$ ($0.45^{+0.2}_{-0}$)	0.017 ± 0.004 (0.43 ± 0.1)
YCN104 0402 X 4	0.079 ± 0.002 (2.0 ± 0.05)	0.157 ± 0.002 (4.0 ± 0.05)	$0.059^{+0.004}_{-0}$ ($1.5^{+0.10}_{-1}$)	$0.025^{+0.008}_{-0}$ ($0.60^{+0.2}_{-0}$)	0.024 ± 0.004 (0.6 ± 0.1)
YCN108 0402 X 8	0.079 ± 0.002 (2.0 ± 0.05)	0.157 ± 0.002 (4.0 ± 0.05)	$0.059^{+0.004}_{-0}$ ($1.5^{+0.10}_{-1}$)	$0.025^{+0.008}_{-0}$ ($0.60^{+0.2}_{-0}$)	0.024 ± 0.004 (0.6 ± 0.1)
YCN162 0603 X 2	0.079 ± 0.002 (2.0 ± 0.05)	0.157 ± 0.002 (4.0 ± 0.05)	$0.059^{+0.004}_{-0}$ ($1.5^{+0.10}_{-1}$)	$0.025^{+0.008}_{-0}$ ($0.60^{+0.2}_{-0}$)	0.024 ± 0.004 (0.6 ± 0.1)
YCN164 0603 X 4	0.079 ± 0.002 (2.0 ± 0.05)	0.157 ± 0.002 (4.0 ± 0.05)	$0.059^{+0.004}_{-0}$ ($1.5^{+0.10}_{-1}$)	$0.03^{+0.008}_{-0}$ ($0.75^{+0.2}_{-0}$)	0.030 ± 0.004 (0.75 ± 0.1)
YCN158 0612 (1632)	0.079 ± 0.002 (2.0 ± 0.05)	0.157 ± 0.004 (4.0 ± 0.1)	$0.059^{+0.004}_{-0}$ ($1.5^{+0.10}_{-1}$)	$0.033^{+0.004}_{-0}$ ($0.85^{+0.10}_{-0}$)	-
YCN358 1225 (3264)	0.079 ± 0.002 (2.0 ± 0.05)	0.157 ± 0.004 (4.0 ± 0.1)	$0.059^{+0.004}_{-0}$ ($1.5^{+0.10}_{-1}$)	-	-
LCN164 0603 X 4	0.079 ± 0.002 (2.0 ± 0.05)	0.157 ± 0.004 (4.0 ± 0.1)	$0.059^{+0.004}_{-0}$ ($1.5^{+0.10}_{-0}$)	$0.033^{+0.004}_{-0}$ ($0.85^{+0.10}_{-0}$)	-

Specifications given herein may be changed at any time without prior notice. Please confirm technical specifications with factory before use.

Specialty

SIP Network Taping : Packaging code = A3 (Ammo Pack 3 Pin Taping)
SIP with 4 or 5 pins have pins 2-4 taped. SIP with 6 or 7 pins have pins 3-5 taped. SIP with 8, 9 or 10 pins have pins 4-6 taped

*Packing quantity varies with size of part and order, consult factory for detailed information

Tape Packing

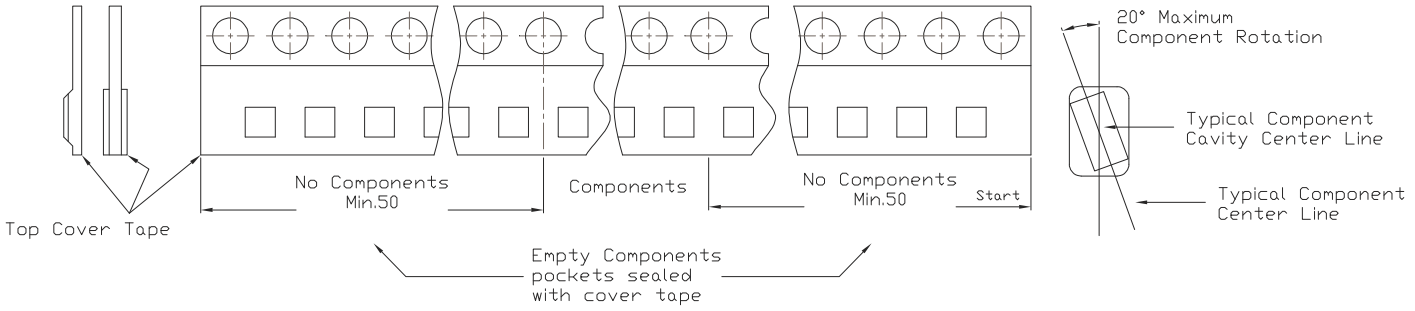

Paper Carrier

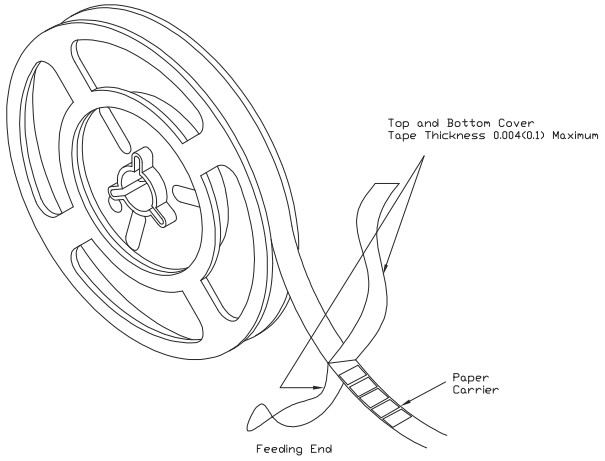

Embossed Plastic Carrier

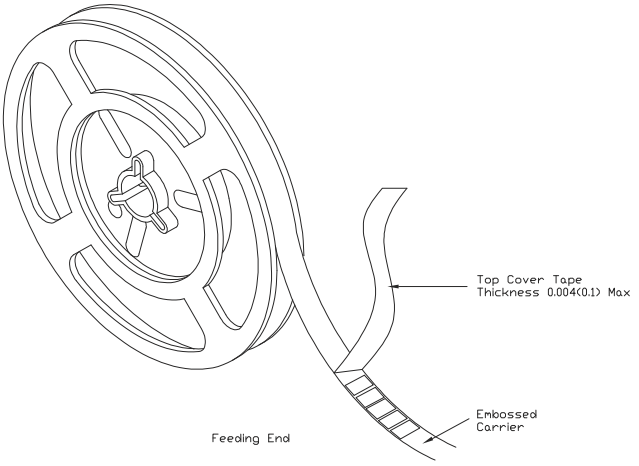

Reel Dimensions

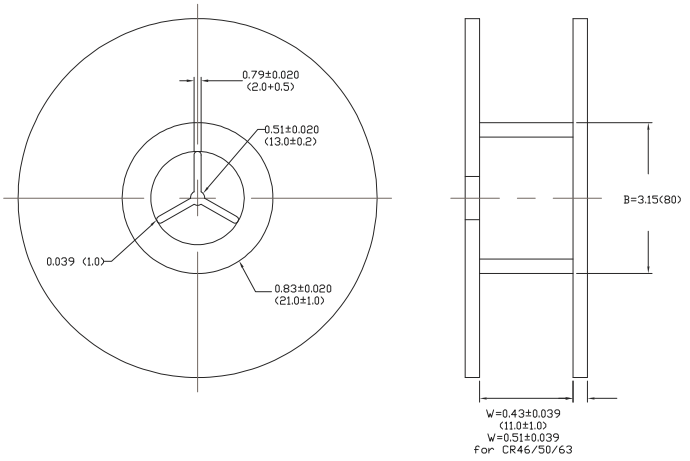

Packing Quantity

Thick Film Chip Resistors

Reels (Diameter A)	Component / Reel				
	Paper Carrier			Embossed Plastic Carrier	
	Chip Resistor 03,05	Chip Resistor 10	Chip Resistor 16/21/32/40	CLS 32/50/63	Chip Resistor 50/63
7" (178 ± 2.0mm)	20,000	10,000	5,000	2,000	4,000
			5,000	-	
10" (254 ± 2.0mm)	-	-	10,000	-	-
13" (330 ± 2.0mm)	-	50,000	20,000	-	10,000

Packing Quantity

Array & Networks

Reels (Diameter A)	Component / Reel	
	Paper Carrier	
	YCN052 / YCN102 / YCN104 (2mm Pitch)	YCN108 / YCN162 / YCN164 (4mm Pitch)
7" (178 ± 2.0mm)	10,000	5,000
10" (254 ± 2.0mm)	20,000	10,000
13" (330 ± 2.0mm)	30,000	15,000

**Tape width for YCN052 / YCN102 / YCN104 / YCN162 / YCN164 is 8mm, and tape width for YCN 108 is 12mm*

Packing Quantity

Specialty

Series	Power Rating	Tape & Reel Type / Dimensions			Packing Qty (pcs)
		Tape Type	Tape Width	Reel size	
SWC1/2	1/2W	Embossed Plastic	12mm	13"	2,500 / 5,000
SWC1	1W	Embossed Plastic	12mm	13"	2,500
SWC2	2W	Embossed Plastic	24mm	13"	1,000
SWC2SS	2W	Embossed Plastic	16mm	13"	2,000
SWC27	2.7W	Embossed Plastic	24mm	13"	1,000
SWC3	3W	Embossed Plastic	32mm	13"	800
SWC35	3.5W	Embossed Plastic	44mm	13"	750
SWC5	5W	Embossed Plastic	44mm	13"	750
SWC1/2L	1/2W	Embossed Plastic	12mm	13"	2,500 / 5,000
SWC1L	1W	Embossed Plastic	12mm	13"	3,000
SWC2L	2W	Embossed Plastic	24mm	13"	2,000
SWC2SSL	2W	Embossed Plastic	12mm	13"	2,000

****Above information serves as a standard Tape & Reel selection guide for user. Specifications to change without notice.***
Consult factory for detailed information before ordering